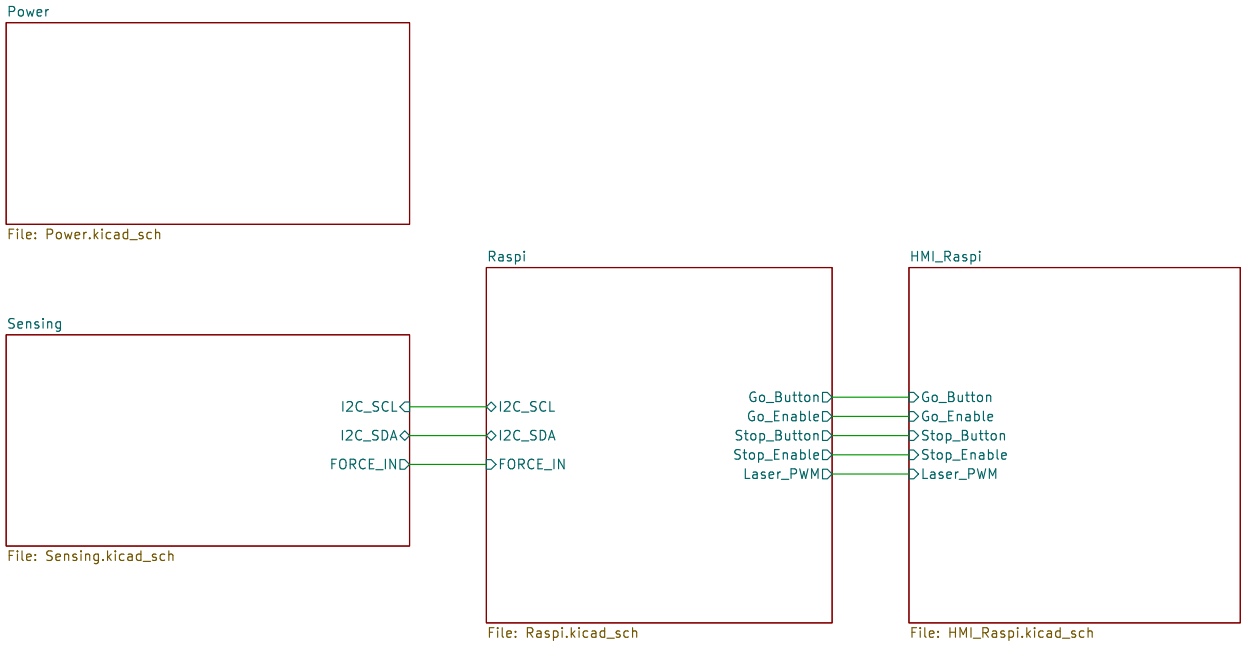

Sheet: /
File: CPR Machine Schematic.kicad_sch

Title:

Size: A4	Date:	**Rev:**
KiCad E.D.A. 9.0.4		Id: 1/5

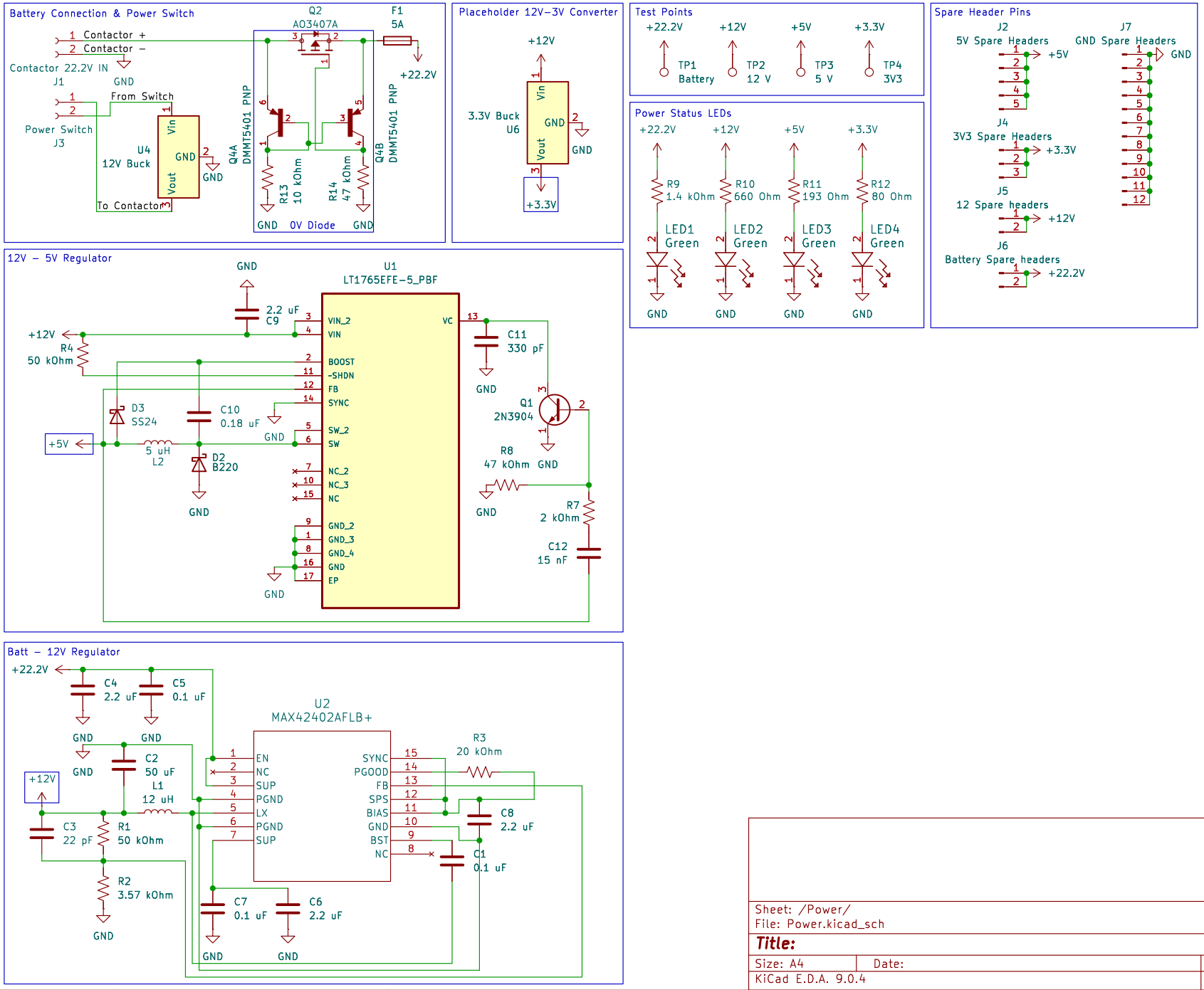

Sheet: /Power/
File: Power.kicad_sch

Title:

Size: A4	Date:	Rev:
KiCad E.D.A. 9.0.4		Id: 5/5

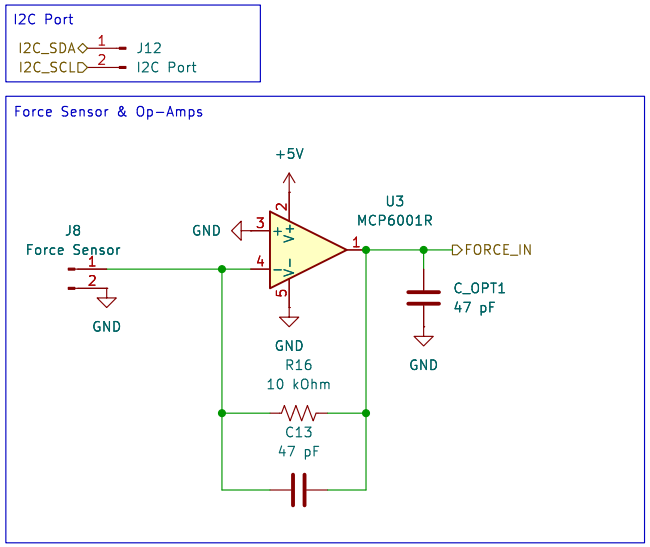

Sheet: /Sensing/
File: Sensing.kicad_sch

Title:

Size: A4	Date:	Rev:
KiCad E.D.A. 9.0.4		Id: 6/5

Screens and Motor Driver connected via HDMI and USB Ports, not GPIO

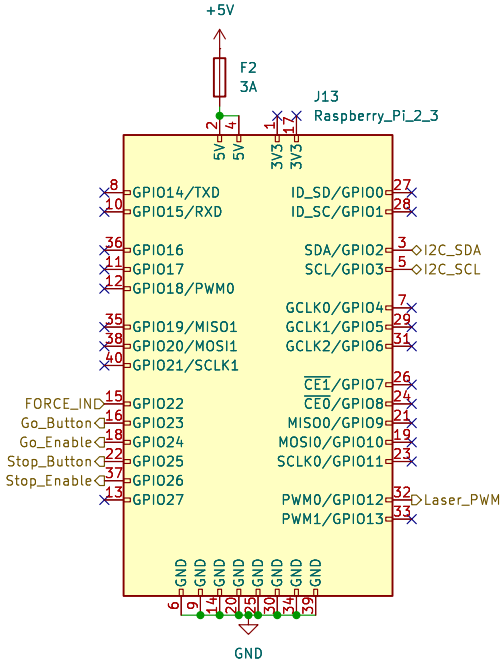

Sheet: /Raspi/
File: Raspi.kicad_sch

Title:

Size: A4	Date:	**Rev:**
KiCad E.D.A. 9.0.4		Id: 7/5

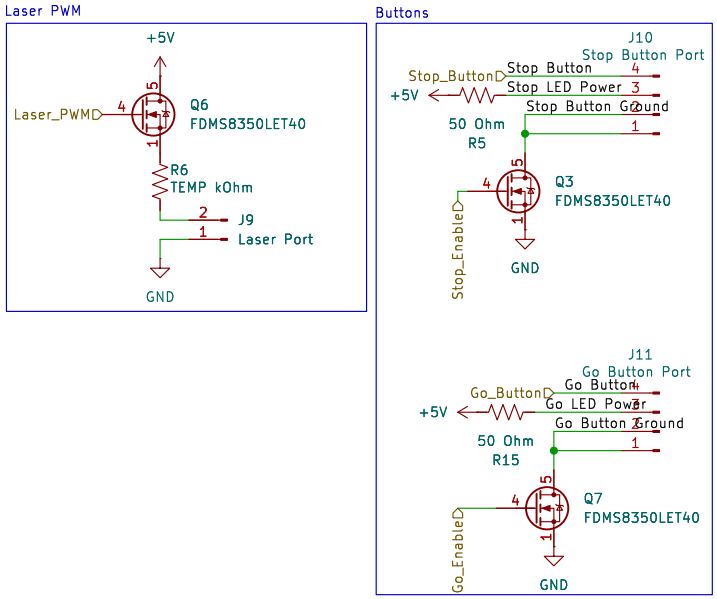

NOTE: This setup causes buttons to only enable when LED is on

Sheet: /HMI_Raspi/
File: HMI_Raspi.kicad_sch

Title:

Size: A4	Date:	**Rev:**
KiCad E.D.A. 9.0.4		Id: 8/5